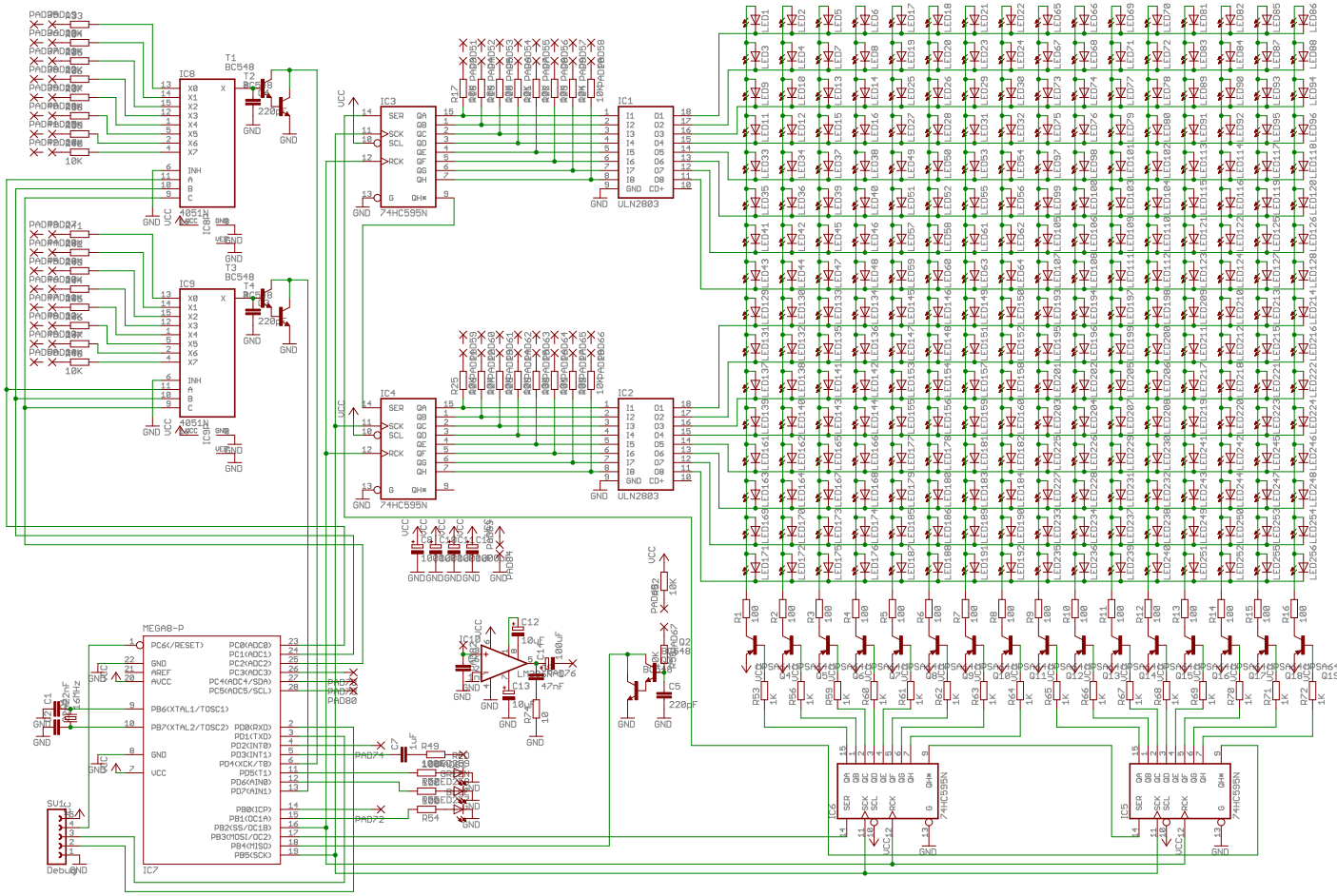

6/27/2010 7:42:53 PM f=0.50 Q:\Projects\Electronics\tone_matrix\board\tone_matrix.sch (Sheet: 1/1)